RoHS

Wellshow Technology

www.wellshow.com

REV	DESCRIPTION	DATE
1.10	CHG PRESS CAP, ADD INSUATOR B, UPDATE BOM	2017/04/19
1.20	NEW DRAWING FRAME	2024/03/27

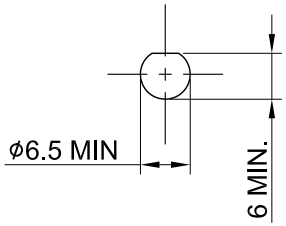

RECOMMENDED MOUNTING HOLE

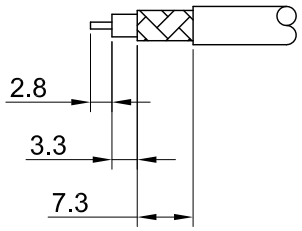

RECOMMENDED STRIP LENGTHS

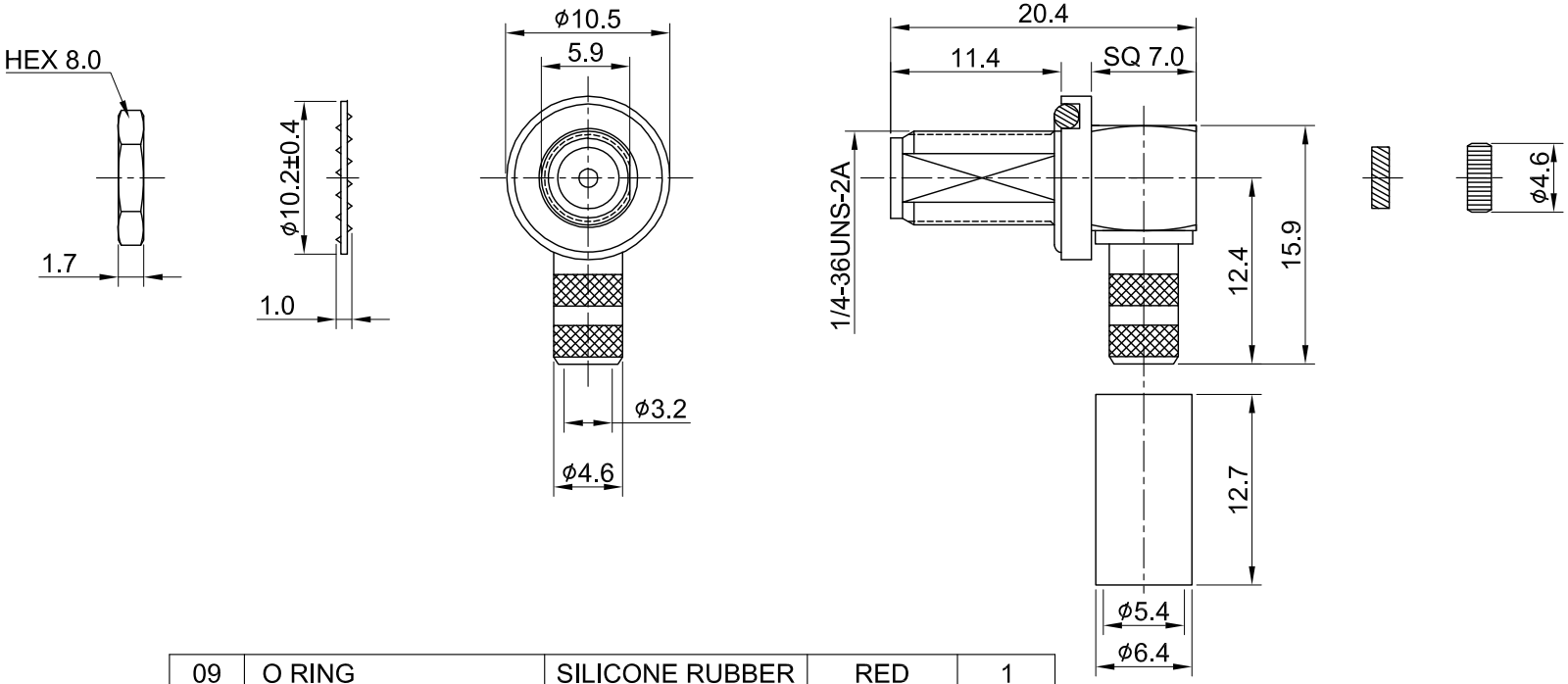

MECHANICAL DATA
DURABILITY : 500 CYCLES
TEMPERATURE RANGE : -65°C ~ + 165°C

ELECTRICAL DATA
FREQUENCY RANGE: DC~6GHz
IMPEDANCE : 50Ω
VSWR : 1.5 MAX.
WORKING VOLTAGE : AC 500V
WITHSTANDING VOLTAGE : AC 1000V
INSULATION RESISTANCE : 5000 MΩ MIN

NO	DESCRIPTION	MATERIAL	FINISH	Q'TY
09	O RING	SILICONE RUBBER	RED	1
08	INSULATOR B	TEFLON	NONE	1
07	FERRULE	BRASS	GOLD	1
06	NUT	BRASS	GOLD	1
05	WASHER	BRASS	GOLD	1
04	CAP	BRASS	GOLD	1
03	CENTER PIN	Be.Cu	GOLD	1
02	INSULATOR A	TEFLON	NONE	1
01	BODY	BRASS	GOLD	1

TITLE
SMA ra.bh.w/o-ring Jack crimp for RG58 (壓蓋)

DWG NO.
C02BD31058A73-1A

Wellshow

CUST.
P/N: N/A
DWG NO: N/A

SHEET 1 of 1 Unit: mm

GENERAL TOLERANCES
.X ±0.2
.XX ±0.2
.XXX ±0.2
ANGLES N/A

DRAWN BY: Kelly 2024/03/27
CHK'D BY: Una 2024/03/27

DA2401180006

REV. 1.20