RoHS

Wellshow Technology

www.wellshow.com

REV	DESCRIPTION	DATE
1.00	INITIAL DESIGN	2012/01/08
1.10	NEW DRAWING FRAME	2024/08/22

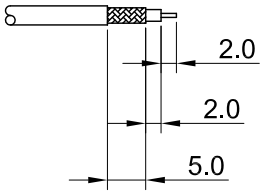

RECOMMENDED
STRIP LENGTHS

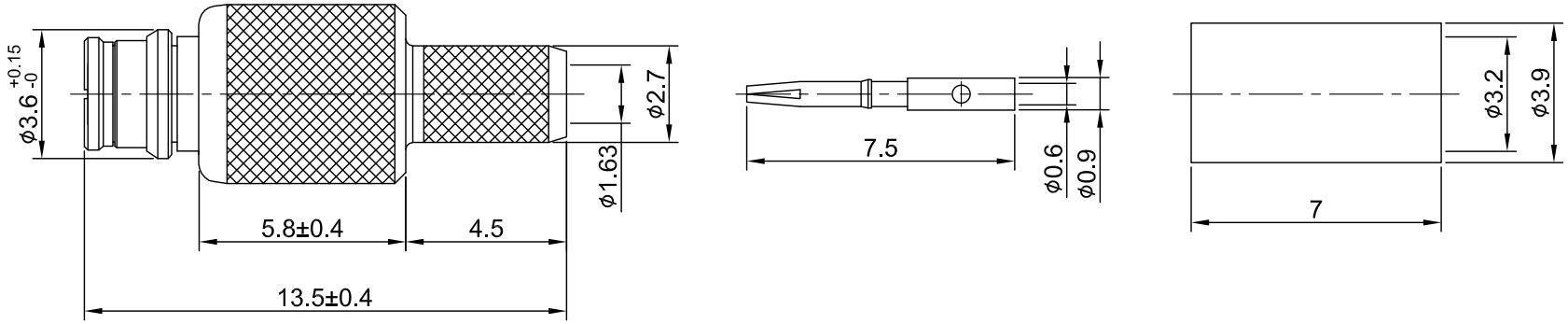

MECHANICAL DATA
DURABILITY : 500 CYCLES
TEMPERATURE RANGE : -65°C ~ + 165°C

ELECTRICAL DATA
FREQUENCY RANGE: DC~6GHz
IMPEDANCE : 50Ω
VSWR : 1.5 MAX.
WORKING VOLTAGE : AC 335V
WITHSTANDING VOLTAGE : AC 500V
INSULATION RESISTANCE : 5000 MΩ MIN

NO	DESCRIPTION	MATERIAL	FINISH	Q'TY
06	FERRULE	BRASS	GOLD	1
05	CENTER PIN	Be.Cu	GOLD	1
04	BODY B	BRASS	GOLD	1
03	INSULATOR	TEFLON	NONE	1
02	BODY A	Be.Cu	GOLD	1
01	ROCK RING	STAINLESS STEEL	NONE	1

TITLE
SMP(F) st. crimp type for RG174/RG316

DWG NO.
C60AA3F174002

Wellshow

CUST.
P/N: N/A
DWG NO: N/A

SHEET 1 of 1 Unit: mm

GENERAL TOLERANCES
.X ±0.2
.XX ±0.2
.XXX ±0.2
ANGLES N/A

DRAWN BY: Kelly 2024/08/22
CHK'D BY: Eileen 2024/08/22

DA2408220007

REV. 1.10